PA-E® RO TANKS

Features

- Patented stainless steel water connection
- High grade butyl diaphragm
- Virgin polypropylene liner
- Two part polyurethane, epoxy primed paint finish
- Leak free, o-ring sealed air valve cap
- NSF 58/61, CE/PED, ACS, WRAS, Evrazes approvals
- Comprehensive testing
- No maintenance

If you are looking for proven performance, PA-E® tanks are the quality solution for your RO system.

The virgin polypropylene shell, high grade butyl rubber diaphragm, and patented stainless steel water connection combine to make a pristine non-corrosive water chamber. By only using the finest materials available we ensure that our tank will not taint your pure water.

Constructed of deep drawn steel domes, PA-E® tanks provides an unparalleled reliability in the RO industry. Its air chamber sealed with a brass air valve and o-ring sealed air cap will provide many years of leak free and service free life. Its two part polyurethane, epoxy primed paint finish will withstand the harshest indoor and outdoor climates throughout the world.

PA-E® tanks are also available in Plasteel version (available in 12, 16 and 19 liters), with a protective plastic shell around the steel tank to make them suitable for all conditions.

PA-E® tanks are quality tested at several stages on the production line to insure the structural integrity of every tank.

SPECIFICATIONS

PA-E® Tank Models

Model #'s	Nominal Volume		Shipping (box) Volume		Shipping (box) Weight		Dimensions					
							A		B		C	
Part Number	liter	gal	m^3	ft^3	kg	lbs	cm	inches	cm	inches	cm	inches
Inline Models												
RO-105	2	0.5	0.0037	0.13	0.8	1.9	19.40	7.64	12.60	4.96		
TP-4	4	1.1	0.0075	0.265	1.60	3.53	24.50	9.65	16.20	6.38		
RO-120	8	2.1	0.016	0.55	2.24	4.94	29.70	11.69	20.20	7.95		
RO-122	12	3.2	0.020	0.72	2.93	6.46	34.90	13.74	23.00	9.06		
RO-132	18	4.8	0.029	1.03	3.60	7.94	35.10	13.82	27.90	10.98		
RO-152	21	5.5	0.037	1.3	4.43	9.77	39.00	15.35	29.00	11.42		
Vertical Models												
TP-35	35	9.2	0.055	1.93	7.11	15.67	47.80	18.82	31.80	12.52	4.50	1.77
RO-1070	60	15.9	0.093	3.3	10.83	23.88	57.50	22.64	38.90	15.31	10.00	3.94
RO-2000	80	21.1	0.127	4.5	14.52	32.01	77.10	30.35	38.90	15.31	10.00	3.94
TP-100	100	26.4	0.161	5.7	19.06	42.02	80.40	31.65	43.00	16.93	12.90	5.08
TP-150	150	39.6	0.280	9.9	31.4	69.2	92.40	36.22	53.00	20.87	13.60	5.12
Plasteel™												
TP-12P	12	3.2	0.023	0.8	3.59	7.91	38.20	15.04	24.10	9.49		
TP-16P	16	4.2	0.028	0.98	3.71	8.18	39.00	15.35	25.10	9.88		
TP-19P	19	5.0	0.037	1.3	4.20	9.26	40.00	15.75	27.50	10.83		

Maximum Working Pressure 7 bar / 100 psi; Tank pre-charge: 0.5 bar / 7 psi
Models of 2 liter - 35 liter 1/4" NPT connection with plastic ball valve
Models of 60 liter - 150 liter 1" BSP elbow connection with 1" NPT plastic extension
Maximum Working Temperature: 50°C /122°F

* Minor dimensional variation may occur

① Patented stainless steel water connection
② High grade butyl diaphragm
③ Two-part polyurethane/epoxy primed paint finish
④ Virgin polypropylene liner

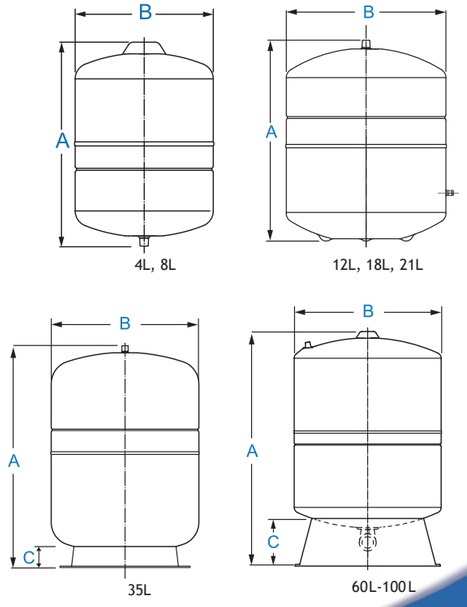

CE ACS Approved WRAS APPROVED PRODUCT NSF Certified to ANSI/NSF 61